Current part is item (3) on diagram. Available at www.oshkoshequipment.com

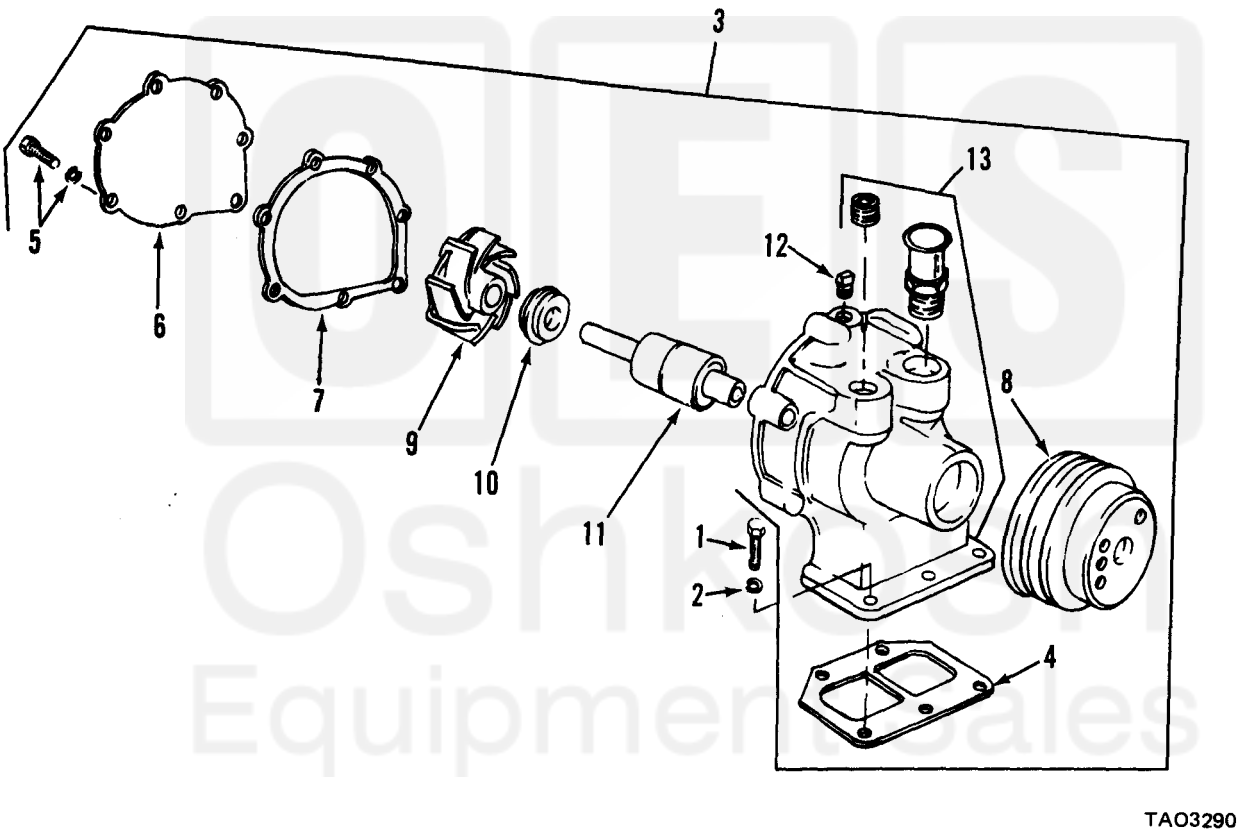

Figure 103. Water pump.

Current part is item (3) on diagram. Available at www.oshkoshequipment.com

Current part is item (3) on diagram. Available at www.oshkoshequipment.com

(1) ILLUSTRATION (a) FIG NO	(2) (b) ITEM NO	SMR CODE	(3) NATIONAL STOCK NUMBER	(4) FSCM	(5) PART NUMBER	(6) DESCRIPTION	(7) U/M	(8) QTY INC IN UNIT
						USABLE ON CODE		
						GROUP 5400 WATER PUMP		
103	1	PAOZZ	5306-00-226-4826	72582	186625	BOLT,MACHINE	EA	5
103	2	PAOZZ	5310-00-407-9566	03538	N405P42C12	WASHER,LOCK	EA	3
103	3	PAOZZ	2930-00-246-5305	72582	5144686	PUMP,COOLANT,ENGINE	EA	1
103	5	PAOZZ	5306-00-018-9691	72582	189691	BOLT,ASSEMBLED WASH	EA	7

Current part is item (3) on diagram. Available at www.oshkoshequipment.com